THIS DRAWING IS THE PROPERTY OF ANALOG DEVICES INC. IT IS NOT TO BE REPRODUCED OR COPIED, IN WHOLE OR IN PART, OR USED IN FURNISHING INFORMATION TO OTHERS, OR FOR ANY OTHER PURPOSE DETRIMENTAL TO THE INTERESTS OF ANALOG DEVICES.
THE EQUIPMENT SHOWN HEREON MAY BE PROTECTED BY PATENTS OWNED OR CONTROLLED BY ANALOG DEVICES.

RELAY CONTROL CHART

CONTROL	CODE	DEVICE	FUNCTION	CONNECTOR

JUMPER TABLE

JP#	ON	OFF
1		
2		
3		
4		
5		

* SEE ASSEMBLY INSTRUCTIONS

REVISIONS

REV	DESCRIPTION	DATE	APPROVED
A	INITIAL RELEASE	23SEP21	A.SERQUINA
B	CHANGES AS PER ECR-106439	22APR22	J.SANCHEZ
C	CHANGES AS PER ECR-113183	03APR23	J.SANCHEZ
D	CHANGES AS PER ECR-121861	25JUL24	R.AURORA

NOTE: PLEASE REFER BELOW DRAWING NO. TO CORRESPONDING MODEL NAME

02_068614-01: EV-DPS-PWRBD1Z VPOS=+17.5V; VNEG=-17.5V; IDUT = Â±20A

02_068614-02: EV-DPS-PWRBD2Z VPOS=+32.5V; VNEG=-3V; IDUT = Â±20A

02_068614-03: EV-DPS-PWRBD4Z VPOS=+9V; VNEG=-5.5V; IDUT = Â±20A

02_068614-04: EV-DPS-PWRBD3Z VPOS=+23.5V; VNEG=-15V; IDUT = Â±16A

02_068614-06: EV-DPS-PWRBD5Z VPOS=+30V; VNEG=-5V; IDUT = Â±20A

P.O SPEC.	BK/BD SPEC.	SOCKET OEM	OEM PART#	HANDLER

TEMPLATE ENGINEER -	DATE	SCHEMATIC
HARDWARE SERVICES M.VALE	23SEP21	HW TYPE : Customer Evaluation Z
HARDWARE SYSTEMS -		Product(s): LTC3871
TEST ENGINEER -		: LT8740 DPS Power
COMPONENT ENGINEER M.YAN	23SEP21	PACKAGE : LeadCount-lead N/A PackageType-family
TEST PROCESS -		: Pitch-pitch StyleVendor Style
HARDWARE RELEASE K.JABATAN	23SEP21	<User Define> <User Define> <User Define>
DESIGNER N.CORDOVA	23SEP21	MASTER PROJECT TEMPLATE TBD / TESTER TEMPLATE 067706_a
PTD ENGINEER A.SERQUINA	23SEP21	UNLESS OTHERWISE SPECIFIED DIMENSIONS ARE IN INCHES
CHECKER -		TOLERANCES: DECIMALS X.XX +-0.010 X.XXX +-0.005; FRACTIONS +-1/32; ANGLES +-2

DRAWING NO. 02_068614-02 REV. E

SIZE D | SCALE 1:1 | CODE ID NO. CodeID | SHEET 1 OF 4

REVISIONS			
REV	DESCRIPTION	DATE	APPROVED

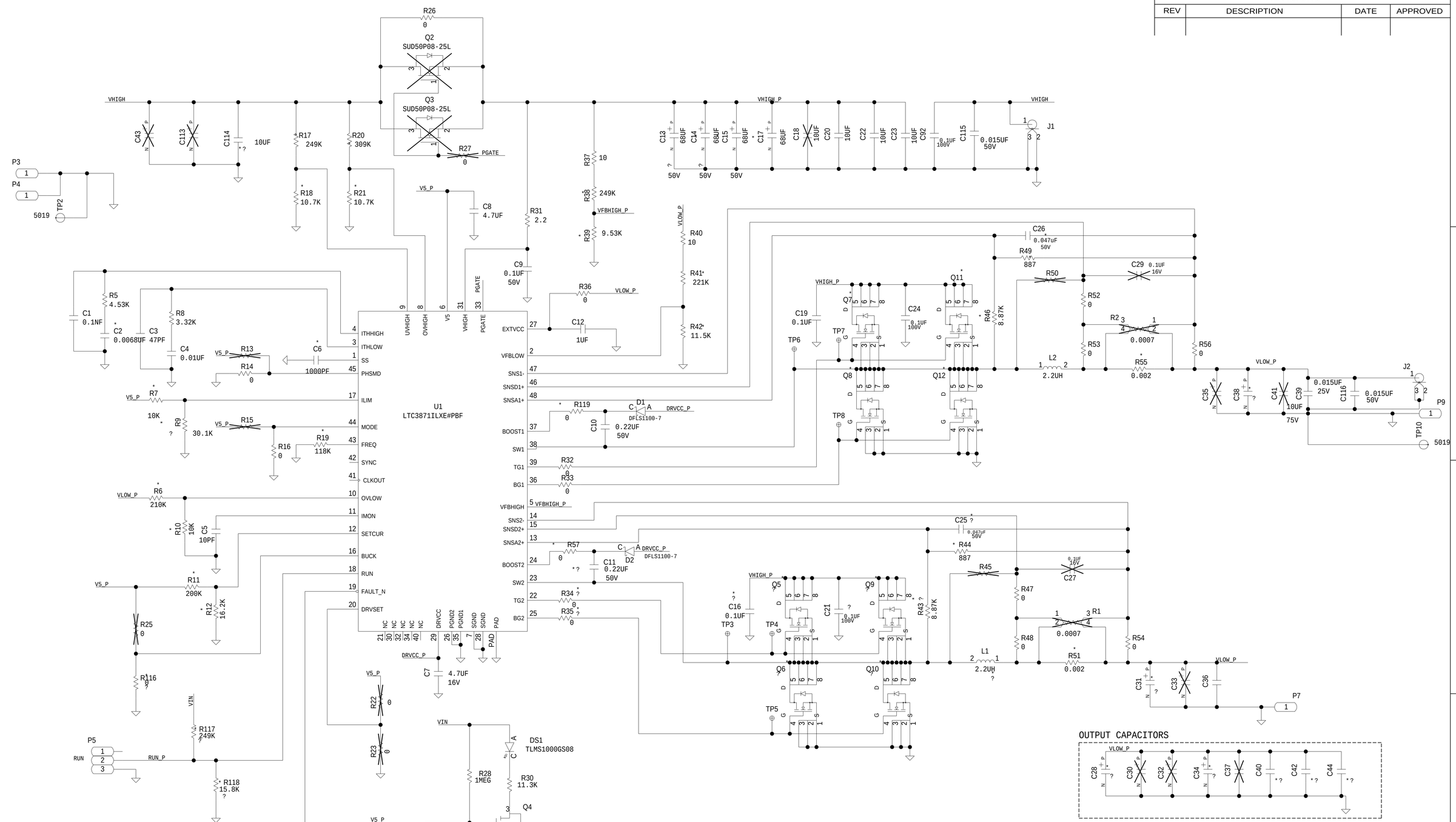

ANALOG DEVICES	SCHEMATIC		
	HW TYPE : Customer Evaluation Z Product(s): LTC3871 : LT8740 DPS Power		
THIS DRAWING IS THE PROPERTY OF ANALOG DEVICES INC. IT IS NOT TO BE REPRODUCED OR COPIED, IN WHOLE OR IN PART, OR USED IN FURNISHING INFORMATION TO OTHERS, OR FOR ANY OTHER PURPOSE DETRIMENTAL TO THE INTERESTS OF ANALOG DEVICES. THE EQUIPMENT SHOWN HEREON MAY BE PROTECTED BY PATENTS OWNED OR CONTROLLED BY OWNED ANALOG DEVICES.	DESIGN VIEW <DESIGN_VIEW>	DRAWING NO. 02_068614-02	REV E
	PTD ENGINEER A.SERQUINA	SIZE D / SCALE 1:1	SHEET 2 OF 4

REVISIONS			
REV	DESCRIPTION	DATE	APPROVED

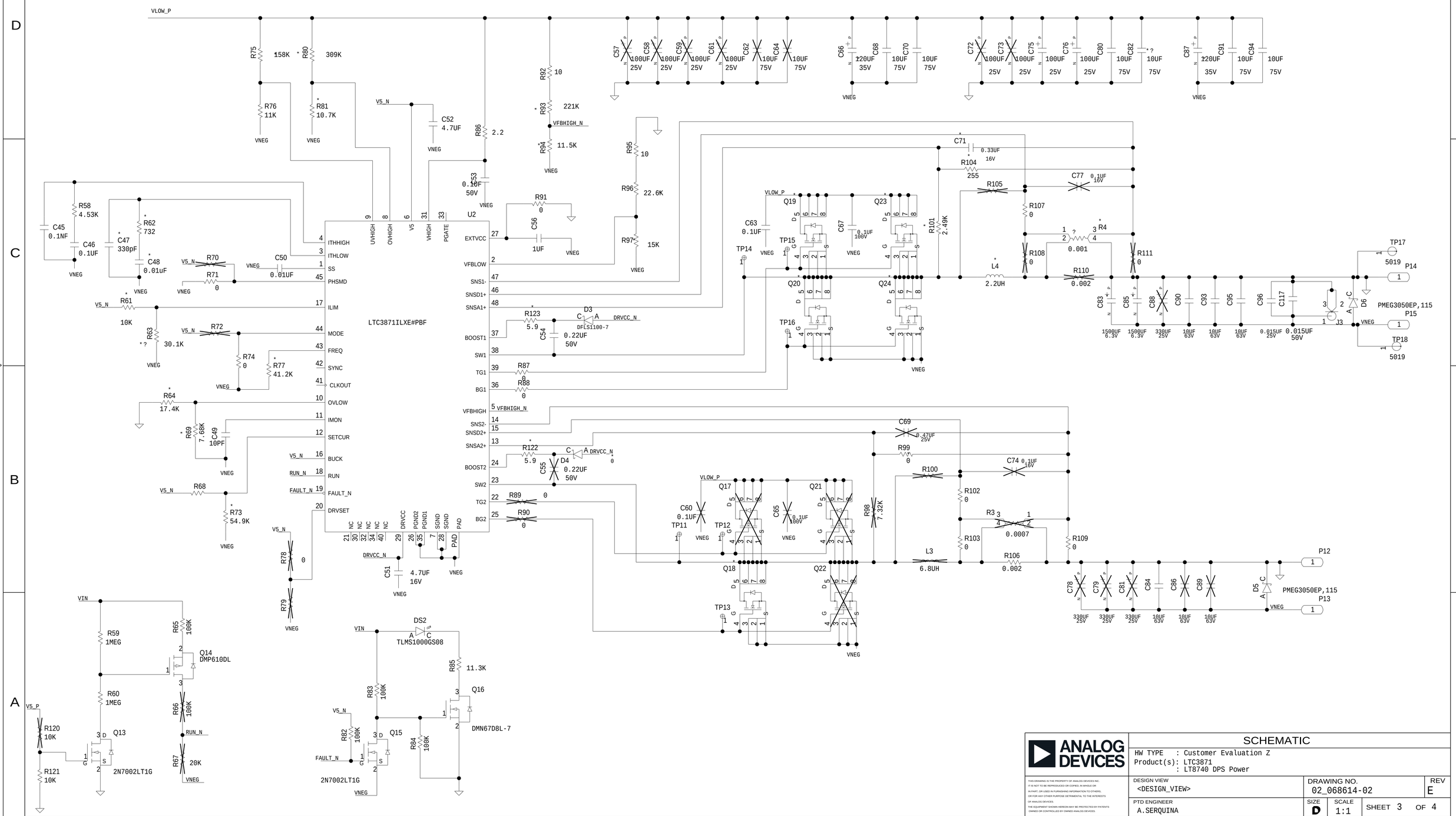

ANALOG DEVICES

THIS DRAWING IS THE PROPERTY OF ANALOG DEVICES INC.
IT IS NOT TO BE REPRODUCED OR COPIED, IN WHOLE OR
IN PART, OR USED IN FURNISHING INFORMATION TO OTHERS,
OR FOR ANY OTHER PURPOSE DETRIMENTAL TO THE INTERESTS
OF ANALOG DEVICES.
THE EQUIPMENT SHOWN HEREON MAY BE PROTECTED BY PATENTS
OWNED OR CONTROLLED BY OWNED ANALOG DEVICES.

SCHEMATIC

HW TYPE : Customer Evaluation Z
Product(s): LTC3871
: LT8740 DPS Power

DESIGN VIEW	DRAWING NO.	REV
<DESIGN_VIEW>	02_068614-02	E

PTD ENGINEER	SIZE	SCALE	SHEET
A.SERQUINA	D	1:1	3 OF 4

REVISIONS			
REV	DESCRIPTION	DATE	APPROVED

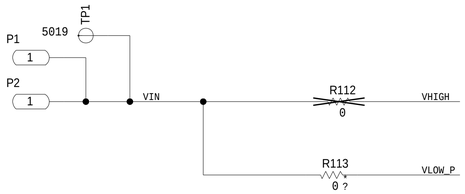

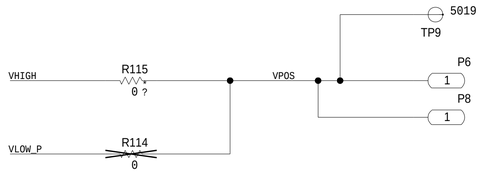

VHIGH ADDITIONAL PROVISION CAPS

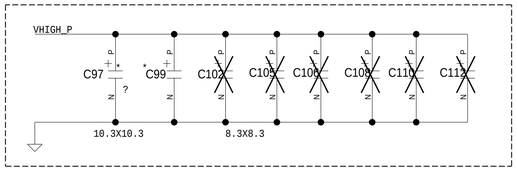

VNEG ADDIOTNAL PROVISION CAPS

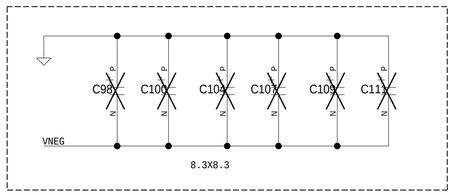

VLOW TO VNEG ADDITIONAL PROVISION CAPS

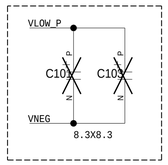

ANALOG DEVICES

THIS DRAWING IS THE PROPERTY OF ANALOG DEVICES INC.
IT IS NOT TO BE REPRODUCED OR COPIED, IN WHOLE OR
IN PART, OR USED IN FURNISHING INFORMATION TO OTHERS,
OR FOR ANY OTHER PURPOSE DETRIMENTAL TO THE INTERESTS
OF ANALOG DEVICES.
THE EQUIPMENT SHOWN HEREON MAY BE PROTECTED BY PATENTS
OWNED OR CONTROLLED BY OWNED ANALOG DEVICES.

SCHEMATIC

HW TYPE : Customer Evaluation Z
Product(s): LTC3871
: LT8740 DPS Power

DESIGN VIEW	DRAWING NO.	REV
<DESIGN_VIEW>	02_068614-02	E

PTD ENGINEER	SIZE	SCALE	SHEET 4 OF 4
A.SERQUINA	D	1:1	